ATRIA

LED HIGH BAY

200W

DIMMABLE

5 WARRANTY YEARS

Brightman™
design efficiency

IP65 RATING
WATERPROOF

TECHNICAL DATA

ATRIA 200W LED HIGH BAY

Input Voltage	AC90-305V ～ 50/60 Hz
LED Chips	Nichia 757G-V1 Series
Driver	Mean Well HBG-160
LED QTY	350pcs
LED Power	200W
Led Luminous Efficiency	140lm /W
Luminous Flux	28,000lm
Power Factor	＞0.95
Colour Temperature	4000K
Colour Rendering Index	Ra≥80
Bean Angle	120º or 60º, 70º, 90º with reflector
Dimmable	YES
Illuminance Design	LED+lens
Working Temperature	-40℃ ～ 50℃
Working Humidity	15%～ 90% RH
IP Rating	IP65
Net weight	5.9Kg
Life-span	>50,000hrs
Power Cable	1.0mm² Triple shield wire
Connection Wire	Brown=Live, Blue=Neutral, Yellow=Earth
Housing Material	Cold Forged Pure Aluminium
Housing Colour	Black
Warranty	5 Years

DIMENSIONS

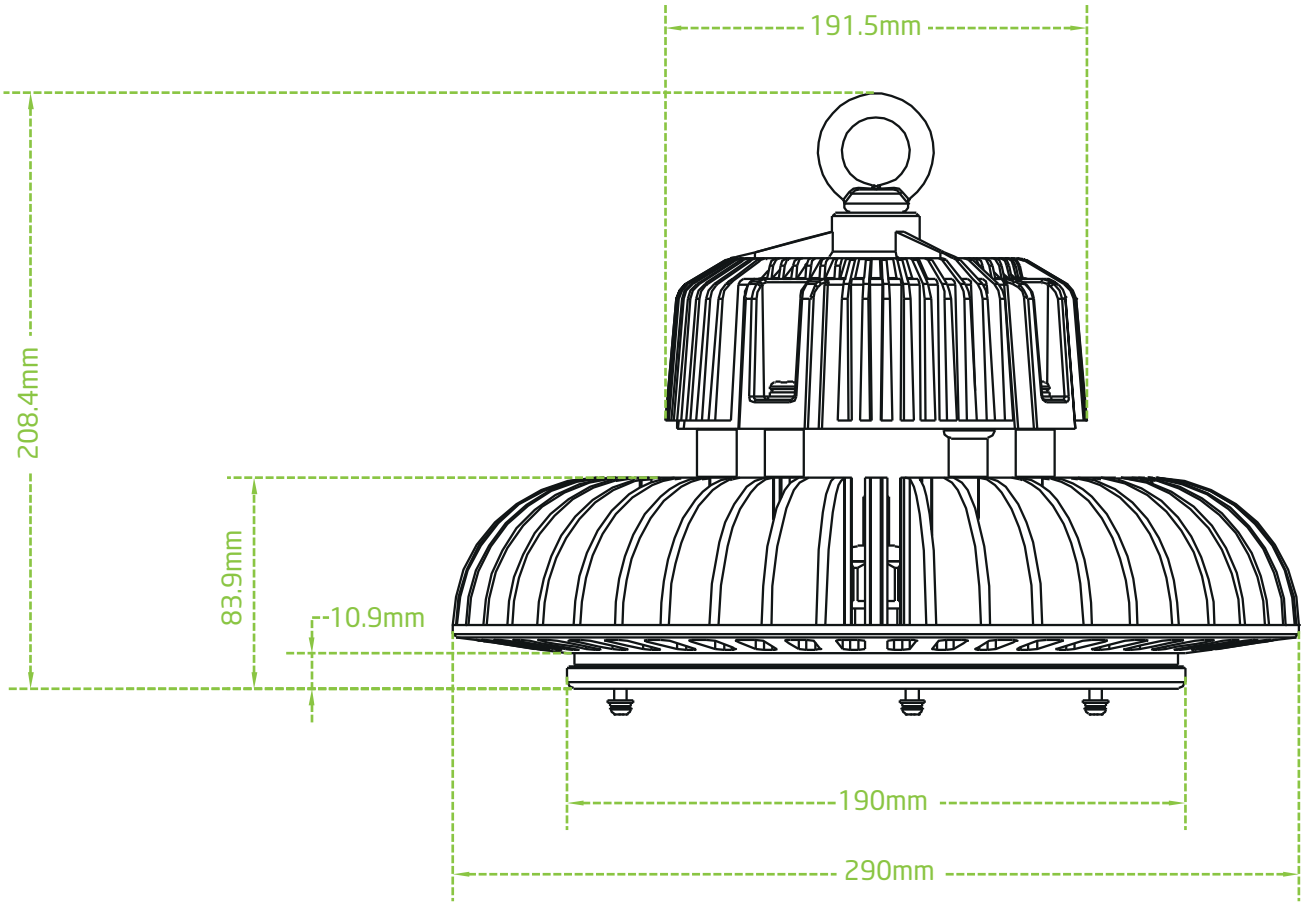

MOUNTING OPTIONS

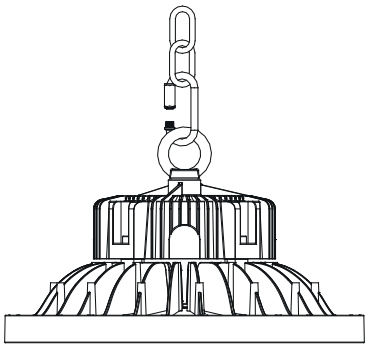

HOOK/CHAIN MOUNTING

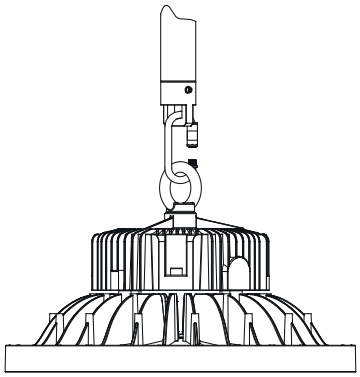

POLE MOUNTING

PHOTOMETRIC DISTRIBUTION

ATRIA 200W LED HIGH BAY

AT 120° Beam Angle

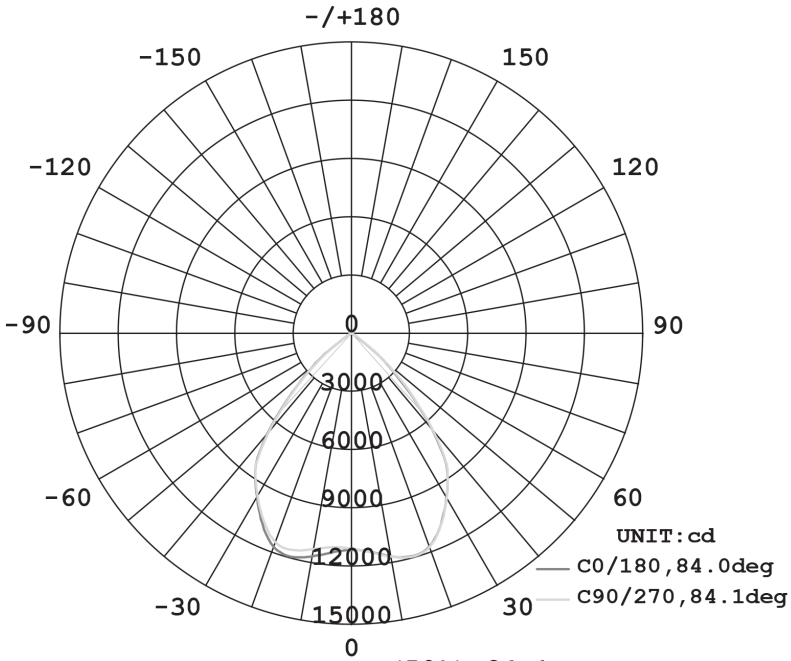

AVERAGE BEAM ANGLE(50%):84.1 DEG

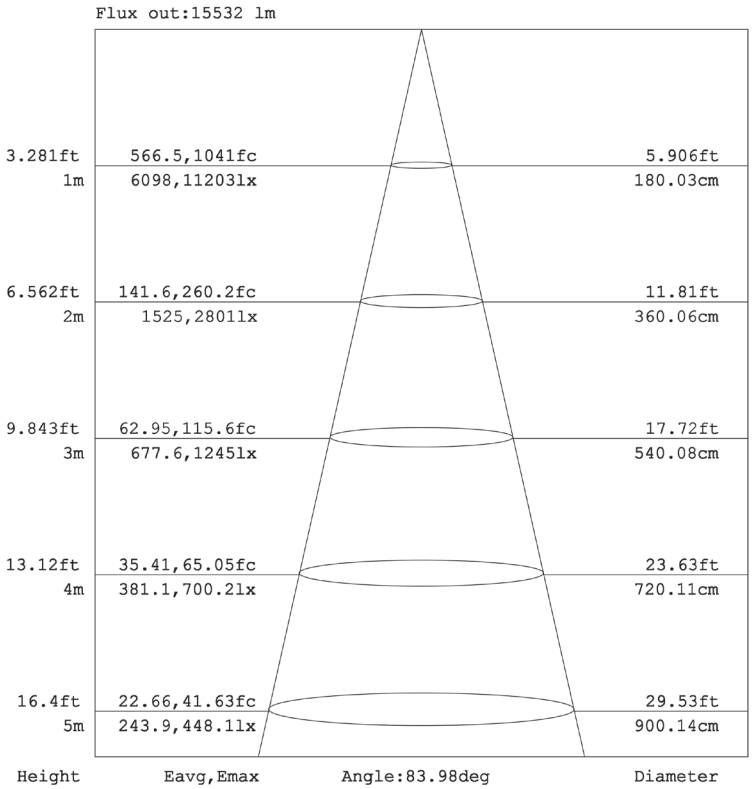

Note:The Curves indicate the illuminated area and the average illumination when the luminaire is at different distance.

Brightman™ design efficiency